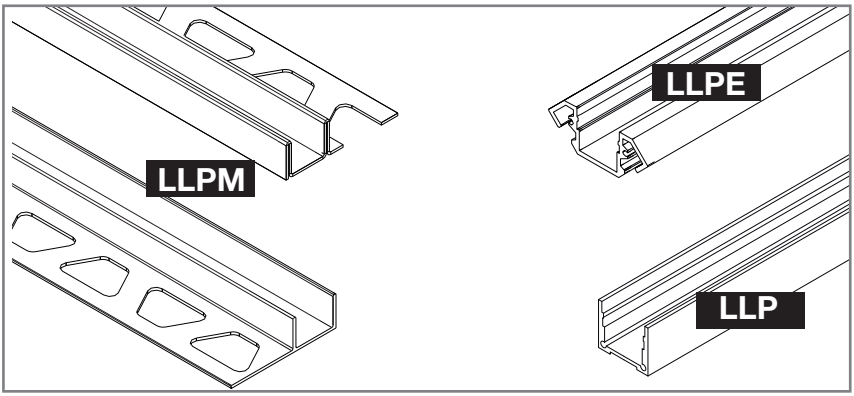
LLPM
LLPE
LLP

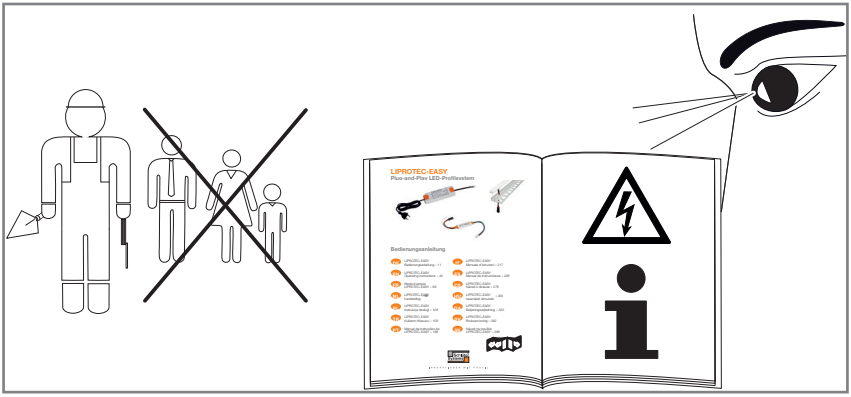
LIPROTEC-EASY
Plug-and-Play LED-Profilsystem
Bedienungsanleitung

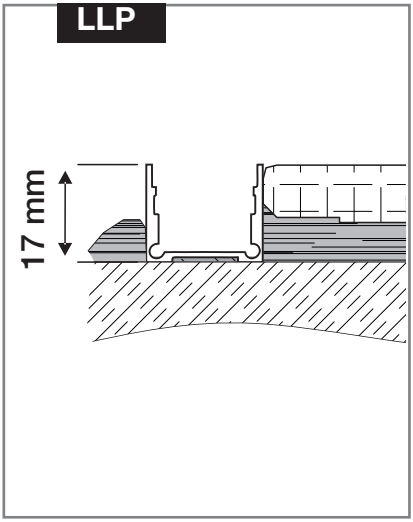
LLP
17 mm

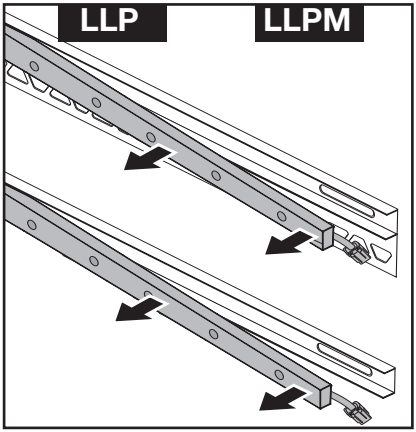
LLP
LLPM

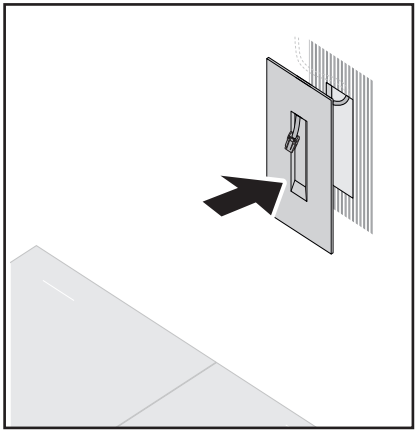

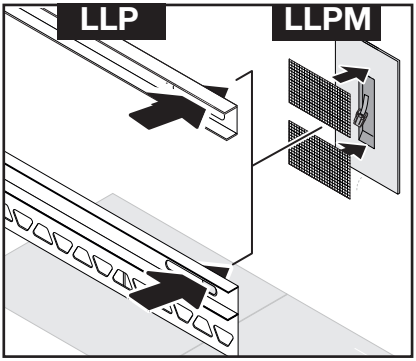
LLP
LLPM

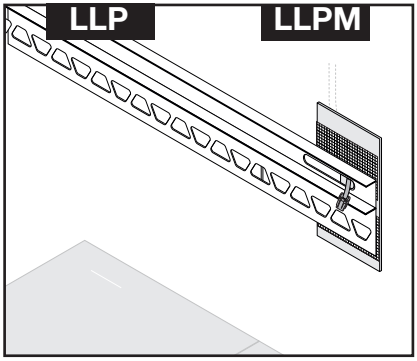
LLP
LLPM

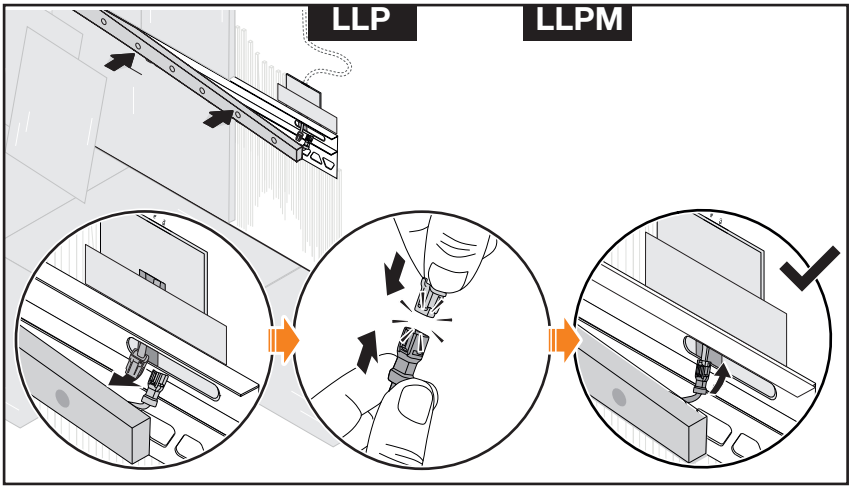
LLP
LLPM

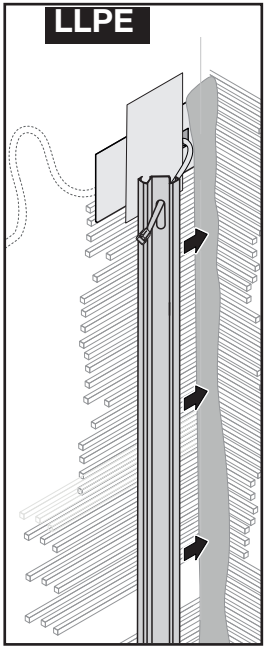
LLPE

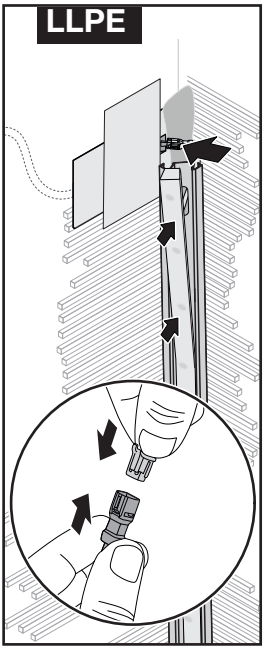
LLPE

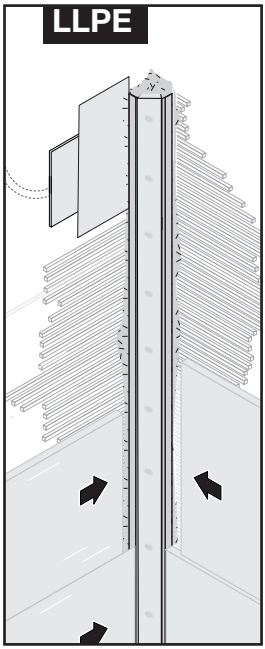
LLPE

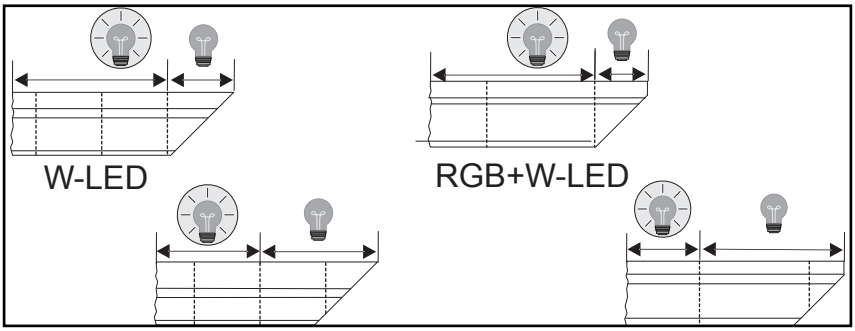
W-LED
RGB+W-LED

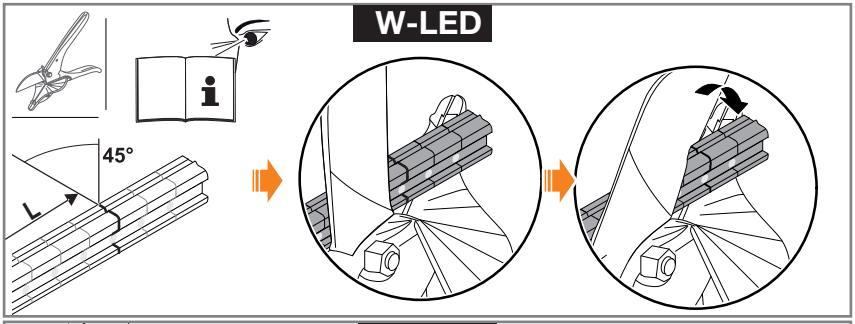
W-LED
45°
L

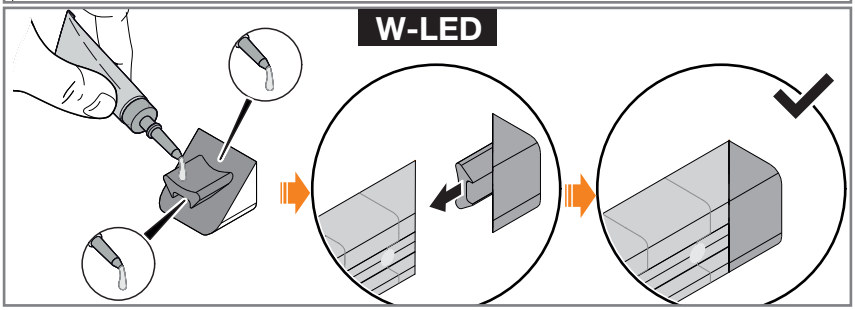
W-LED

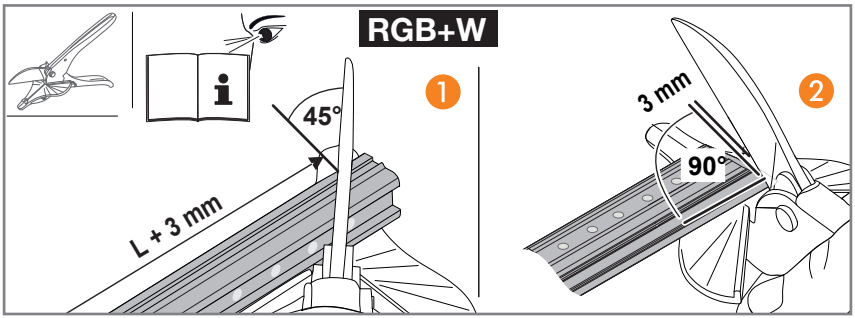
RGB+W
45°
L + 3 mm
1
3 mm
90°
2

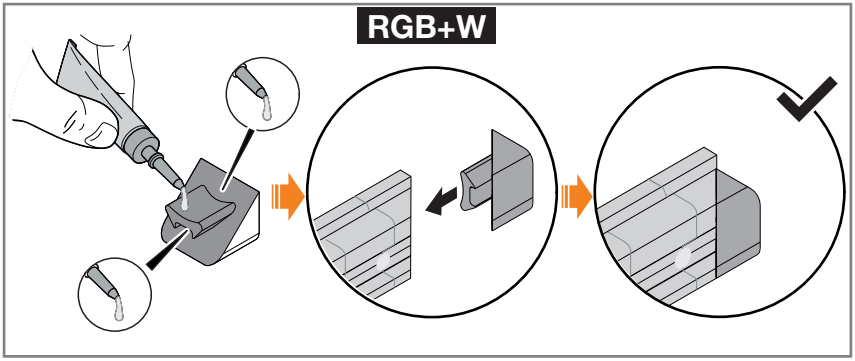
RGB+W